wash me_110 cm washbasin, composite

CL/02.13038, CL/02.26038, CL/02.27038
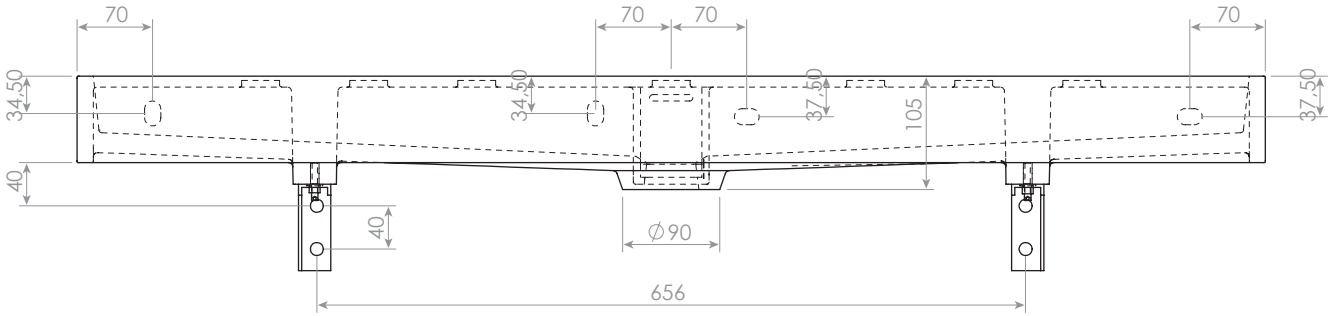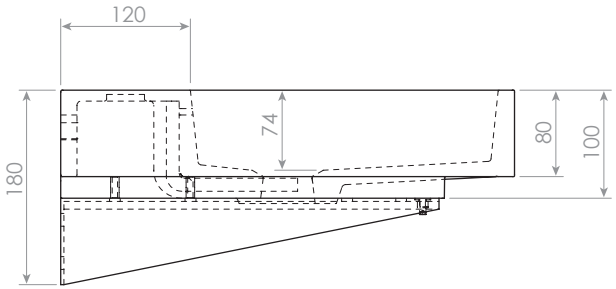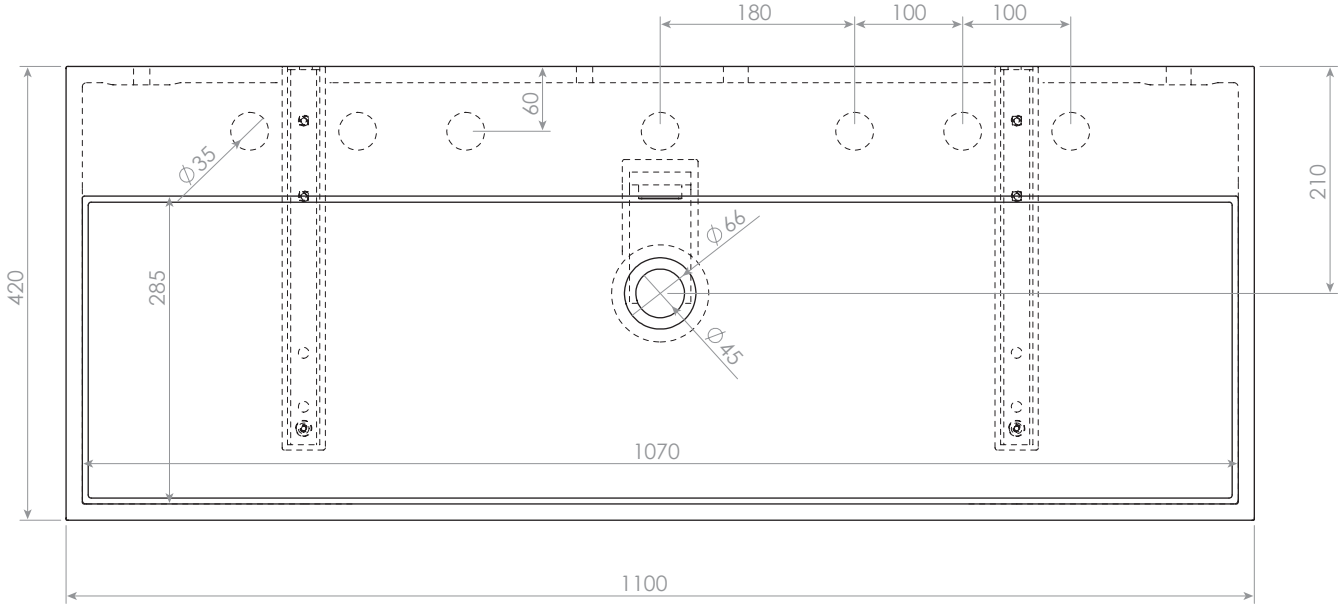
clou
bath findings